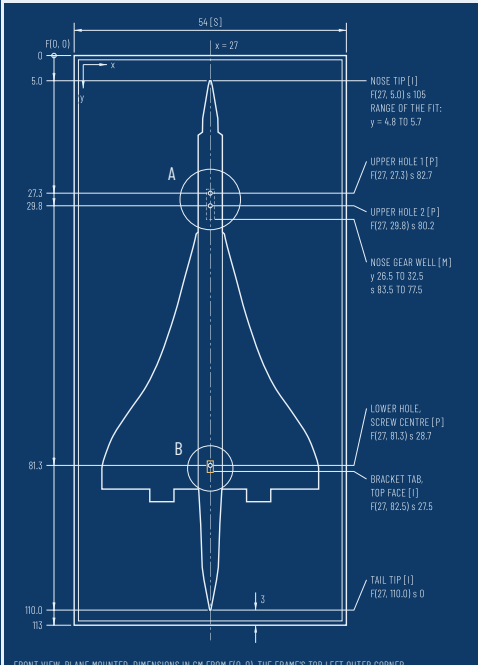

FRONT VIEW, PLANE MOUNTED. DIMENSIONS IN CM FROM F(0, 0), THE FRAME'S TOP LEFT OUTER CORNER. SEEN FROM THE FRONT, ALL FIXINGS LIE HIDDEN BEHIND THE FUSELAGE. SEE DETAILS A AND B.

GENERAL ARRANGEMENT, FRONT 1:15

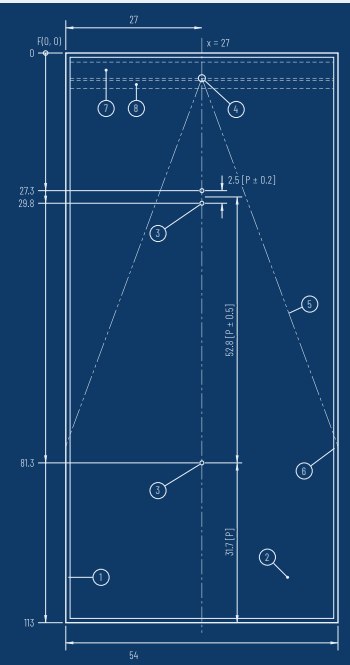

FRAME, FRONT 1:15

FRAME

OUTER SIZE 54 × 113 CM [S]. WEIGHT 5 KG [S].

1. PROFILE: BLACK ALUMINIUM, VISIBLE WIDTH 0.7 TO 1.0 CM [E]. DEPTH NOT MEASURED.
2. PANEL: GLOSSY PRINTED ACRYLIC, MIRROR FINISH (OBSERVED).
3. HOLES: 3, BRASS-SLEEVED, ALL ON x = 27 [P]. SLEEVE FLANGE DIAMETER 6.5 TO 8 MM [E], BORE 4 TO 5 MM [E]. PLAIN THREAD ASSUMED [I].

LOWER HOLE: 31.7 CM ABOVE THE BOTTOM EDGE. BACK SIDE, HANGERS: NOT DOCUMENTED.

ARTWORK, POSITION REFERENCE ONLY

4. TIP OF THE RED DELTA: F(27, 5.0) [P ± 0.5].
5. DELTA HALF-WIDTH: 0.37 × (y − 5) CM [P].
6. DELTA MEETS THE FRAME SIDES AT y = 77 TO 78 [P].
7. LETTERING ROW "CONCORDE": y = 1.8 TO 5.0, ACROSS THE WIDTH [P].
8. LETTERING ROW "AIR FRANCE": y = 5.5 TO 7.0, ACROSS THE WIDTH [P].

BACKGROUND: WHITE AT THE TOP, DARK TOWARD THE BOTTOM (OBSERVED).

DIMENSIONS IN CM.

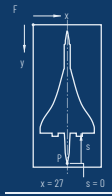

KEY TO COORDINATES 1:60

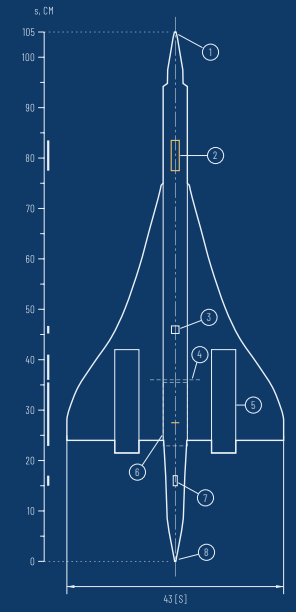

PLANE, BELLY PLAN 1:15

PLANE

LENGTH, NOSE TIP TO TAIL TIP: 105 CM [S, M]. WINGSPAN 43 CM [S]. HEIGHT ON LANDING GEAR 15 CM [S]. WEIGHT 1.8 TO 2.0 KG (REPORTED). FUSELAGE WIDTH 4.8 CM, 8 STUDS [E].

TURNING THE TAIL CONE RAISES AND LOWERS THE GEAR [S]. THE TAIL BUMPER WHEEL IS DEPLOYED AND STOWED BY HAND (OBSERVED).

OUTLINE TRACED FROM PHOTOS OF THE BUILT MODEL AND SCALED TO 105 × 43 CM [P]. WING APEX AT s 75, WING TRAILING EDGE AT s 24, TAIL CONE FROM s 8.

BELLY STATIONS, NOSE TO TAIL

1. NOSE TIP, s 105. WIDTH 0.8 [M].
2. NOSE GEAR WELL, s 77.5 TO 83.5, WIDTH 1.6. THE GEAR RETRACTS FORWARD; THE RETRACTED LEG LIES INSIDE. TIE ANCHOR [M ± 1].
3. STAND SOCKET, s 45.2 TO 46.7. SQUARE HOLE, 1.5. UNUSED [M].
4. MAIN LANDING GEAR, s 36 TO 41. AXLES AT 36.0 [M].
5. ENGINE NACELLES, UNDER THE WINGS. LOWEST BELLY PARTS. NOZZLE ENDS AT s 21.5 [M ± 1]. POSITION AND LENGTH FROM PHOTOS [E].
6. REAR BELLY, s 22.9 TO 35.5, WITH THE BRACKET SEAT AT s 27.5. SEE REAR BELLY VIEW.
7. TAIL BUMPER WHEEL, s 15 TO 17. STOW BEFORE MOUNTING. UNUSED [M].
8. TAIL TIP, s 0. THE TAIL CONE ROTATES [M].

BELLY SEEN FROM BELOW, NOSE UP. DIMENSIONS IN CM. WIDTHS ARE ESTIMATES FROM STUD COUNTS.

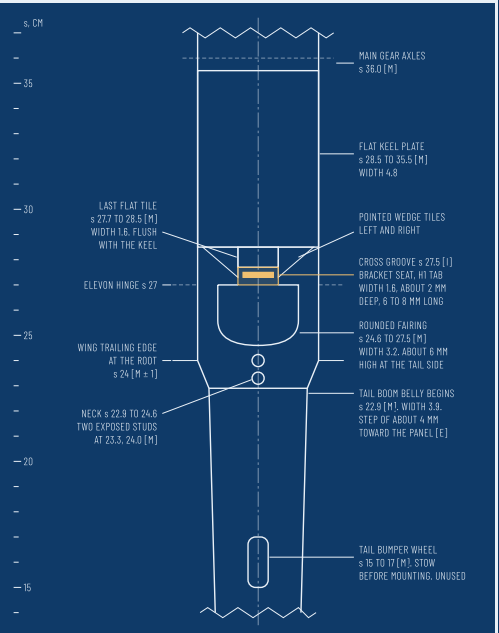

BELLY SEEN FROM BELOW, NOSE UP. STATIONS IN CM FROM THE TAIL TIP. SECTION THROUGH THIS ZONE: DETAIL B.

50 MM

PLANE, REAR BELLY, s 15 TO 36 1:3

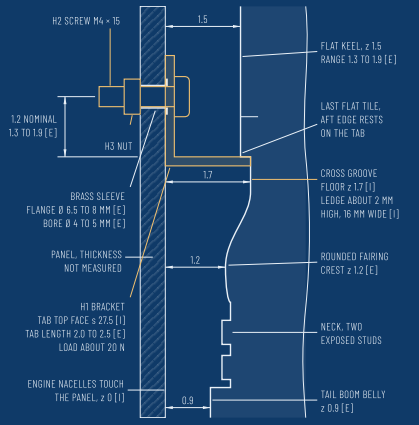

SECTION ON THE CENTRELINE AT THE LOWER HOLE. PANEL LEFT, NOSE UP. DEPTHS z IN CM FROM THE PANEL FACE. A TAB LONGER THAN THE GAP HOLDS THE TAIL A FEW MILLIMETRES OFF THE PANEL.

DETAIL B 1:1.5

COORDINATE SYSTEMS

SYSTEM	ORIGIN	AXIS	UNIT	RANGE
F, FRAME	TOP LEFT OUTER CORNER OF THE FRAME, SEEN FROM THE FRONT	x RIGHT, y DOWN	CM	x 0 TO 54, y 0 TO 113
P, PLANE STATION	TAIL TIP, ON THE FUSELAGE CENTRELINE	s TOWARD THE NOSE	CM	0 TO 105
z, DEPTH	FRONT FACE OF THE PANEL	z TOWARD THE VIEWER	CM	PLANE BELLY AT z > 0

FRAME CENTRELINE: x = 27.

MOUNTED RELATION, NOMINAL: y = 110 − s. NOSE TIP AT y = 5, TAIL TIP AT y = 110.

PLANE CENTRELINE LIES ON x = 27.

LEGO GRID FOR DETAIL SCALING: STUD PITCH 8.0 MM, PLATE HEIGHT 3.2 MM.

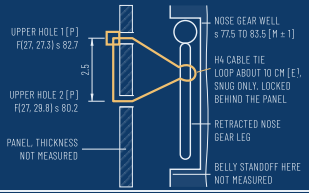

SECTION ON THE CENTRELINE AT THE UPPER HOLES. THE TIE STOPS THE NOSE FROM TIPPING FORWARD. FORCE ABOUT 1 N [I].

DETAIL A 1:3

SUPPLIED WITH THE FRAME SIZES ARE ESTIMATES [E].

ID	PART	QTY	SIZE	USE
H1	STEEL L-BRACKET, ONE HOLE	1	12 MM WIDE, LEGS 20 TO 25 MM, 1.5 TO 2 MM THICK	LOWER HOLE. CARRIES THE PLANE
H2	MACHINE SCREW, PAN HEAD	2	M4 × 15	ONE FIXES H1. ONE SPARE
H3	NUT	1	M4	BEHIND THE PANEL ON H2
H4	CABLE TIE, WHITE	1	15 TO 20 CM × 2.5 MM	UPPER HOLES. HOLDS THE NOSE
H5	WALL PLUG	4	6 × 30 MM	WALL, MASONRY
H6	WOOD SCREW	4	4 × 40 MM	WALL, WITH H5
H7	STEEL NAIL WITH RED COLLAR	4	NOT MEASURED	WALL, ALTERNATIVE TO H5 AND H6

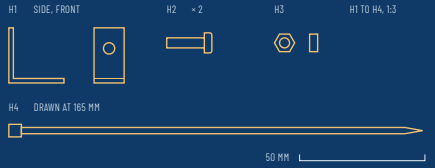

NOT SUPPLIED

ID	TOOL	USE
T1	SCREWDRIVER	H2, H6
T2	PLIERS OR 7 MM SPANNER	H3
T3	SIDE CUTTER	TAIL OF H4
T4	DRILL WITH 6 MM MASONRY BIT	H5
T5	HAMMER	H7
T6	SPIRIT LEVEL	HANGING

GENERAL NOTES

1. MOUNTING OF THE LEGO CONCORDE 10318 ON THE MARK'S MAGIC X STÉPHANE BEILLARD WALL FRAME, 54 × 113 CM. FOR OWNERS OF THE SAME FRAME AND SET. THE BOX HOLDS NO INSTRUCTIONS.
2. MOUNTED STATE: PLANE VERTICAL, NOSE UP, BELLY TO THE PANEL, ON THE FRAME'S VERTICAL CENTRELINE.
3. ONE L-BRACKET IN THE LOWER HOLE CARRIES THE WEIGHT. ONE CABLE TIE THROUGH THE UPPER HOLES HOLDS THE NOSE.
4. NOT USED: THE PLANE'S STAND SOCKET AND TAIL BUMPER WHEEL.
5. STATUS: DERIVED FROM MEASUREMENTS AND PHOTOS. NOT CONFIRMED AGAINST THE MAKER'S VIDEO.
6. UNITS: CM FOR LAYOUT, MM FOR HARDWARE.
7. DATUMS: FRAME TOP LEFT OUTER CORNER, PLANE TAIL TIP.
8. DIMENSIONS WITH BASIS E OR I ARE REFERENCE VALUES.
9. SCALES APPLY ON A4 LANDSCAPE AT 100 %. THE BAR BELOW MEASURES 30 MM.

30 MM

BASIS CODES

CODE	MEANING	TOLERANCE
S	SUPPLIER OR SET SPECIFICATION	AS PUBLISHED
M	READ WITH A FOLDING RULE ON THE MODEL	± 0.5 CM
P	DERIVED FROM PHOTOS BY PERSPECTIVE CORRECTION	± 1 CM
E	ESTIMATE FROM PHOTOS OR STUD COUNTS	ROUGH. VERIFY
I	INFERRED FROM GEOMETRY, NOT OBSERVED DIRECTLY	VERIFY

CODES APPEAR IN SQUARE BRACKETS AFTER A VALUE. OTHER ENTRIES: OBSERVED = SEEN IN PHOTOS, NOT MEASURED. REPORTED = THIRD-PARTY FIGURE. OPEN = NOT KNOWN.

ASSEMBLY SEQUENCE

STEP	1	2	3	4	5	6	7
VIEW			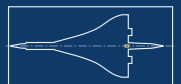		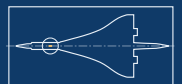		
OPERATION	PREPARE THE PLANE: GEAR RETRACTED, TAIL BUMPER STOWED, NOSE STRAIGHT.	FIX THE BRACKET TO THE LOWER HOLE. TAB AT THE BOTTOM, POINTING OUT. NUT BEHIND THE PANEL.	LAY THE FRAME FLAT, FACE UP. PLACE THE PLANE BELLY DOWN, NOSE TOWARD THE LETTERING.	SLIDE THE PLANE TOWARD THE BOTTOM EDGE UNTIL THE TAB DROPS INTO THE CROSS GROOVE.	FEED THE TIE FROM BEHIND THROUGH ONE UPPER HOLE, AROUND THE RETRACTED NOSE GEAR LEG, BACK THROUGH THE OTHER HOLE. LOCK IT BEHIND THE PANEL. SNUG, NOT TIGHT. CUT THE TAIL.	STAND THE FRAME AGAINST A WALL. PRESS THE PLANE DOWN BY HAND. NOTHING MAY MOVE.	HANG THE FRAME. MASONRY: PLUGS AND SCREWS. ALTERNATIVE: STEEL NAILS.
PARTS	NONE	H1, H2, H3, T1, T2	NONE	NONE	H4, T3	NONE	H5 AND H6, OR H7. T4, T5, T6
DATA	GEAR: TURN THE TAIL CONE	F(27, 81.3)	PLANE CENTRELINE ON x = 27	s = 27.5	F(27, 27.3) AND F(27, 29.8)	PRESS TEST	WALL LOAD 7 KG

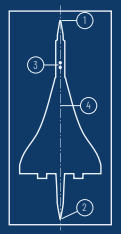

CHECK POINTS 1:40

CHECKS AFTER SEATING

- [ ] 1 NOSE TIP ON THE TIP OF THE RED DELTA, y = 5.
- [ ] 2 TAIL TIP 3 CM ABOVE THE BOTTOM EDGE.
- [ ] 3 BOTH UPPER HOLES OPEN INTO THE NOSE GEAR WELL.
- [ ] 4 PLANE CENTRELINE ON THE FRAME CENTRELINE.
- [ ] 5 PRESS TEST PASSED BEFORE HANGING.

FALLBACK

IF THE UPPER HOLES MISS THE WELL: BRACKET FLIPPED, TAB ABOVE THE SCREW. THE PLANE THEN SITS ABOUT 3 CM HIGHER.

WARNINGS

DO NOT TURN THE TAIL CONE WHILE MOUNTED. IT DRIVES THE LANDING GEAR AGAINST THE TIE.

TIE SNUG, NOT TIGHT. A HARD PULL DRAGS THE GEAR LEG OUT OF ITS WELL.

THE BRACKET LEDGE IS ABOUT 2 MM. SEAT THE PLANE WITH THE FRAME LYING FLAT.

WALL LOAD ABOUT 7 KG: FRAME 5, PLANE 2.

LEGO CONCORDE 10318, WALL FRAME MOUNTING ALL VIEWS AND SCHEDULES	SCALE AS NOTED	UNITS CM, MM	DATE 16 NOV 2026	REV A	SHEET 01 / 01